ESENSORS

Specializing in Network Sensors

PM31

3 Phase Digital Power Meter

Instruction Manual

Version 2.0

This Page Intentionally Blank.

COPY RIGHTS

PRINTING HISTORY

January 2012
April 2012

LIMITED WARRANTY

This limited warranty is granted to the customer by Esensors, Inc. and extends only to the original customer performing the purchase of Esensors product. The goods you purchased are warranted free from defects in workmanship and materials at the time of sale. If a product exhibits a manufacturing defect, Esensors, Inc. will, at its option, repair or replace it (with the same or equivalent model), with no charge to you. If the limited warranty period is not explicitly stated on any prior written agreement, then the limited warranty defaults to one (1) year from invoice date.

Damage resulting from accidents, alterations, failure to follow instructions, incorrect assembly, misuse, unauthorized service, fire, flood, power surges, acts of God, regular wear and tear or other causes not arising from manufacturing defects is NOT covered by this warranty. If the product is altered in any way, the warranty is voided.

Esensors, Inc. or its suppliers will not be liable and will not compensate for loss of time, inconvenience, loss of the use of the product, property damage caused by the product, personal injury and/or death arising from the use of this product, its failure to work or any other incidental or consequential damage arising from the usage of this product. Esensors, Inc. provides no warranty, expressed or implied, as to the fitness of the products for any particular purpose. Parts used in repairing or replacing the product will be warranted until the original warranty expires. Products or parts that malfunction and are not warranted will be replaced or repaired and then shipped entirely at the expense of the customer.

This warranty is given in lieu of all other warranties, expressed or implied, including the warranties of merchantability and fitness for a particular purpose and constitutes the only warranty made by Esensors, Inc

CONTENTS

This page left intentionally blank.

Introduction

The Esensors, Inc. 3 phase Digital Power Meter **PM31** is an electronic device *classified* as a *Smart Sensor*. The PM31 is designed to utilize the Internet to transmit 3 phase voltage, current and power information, and optionally temperature, relative humidity, and illumination data, from a remote acquisition point to a host computer or hosted database.

The PM31 offers built-in sensors for monitoring/ measuring for power line parameters such as Voltage, Current, Power factor, etc, and an embedded mini-webserver. Users are able to access the sensor data using Hypertext Transfer Protocol (HTTP) based commands.

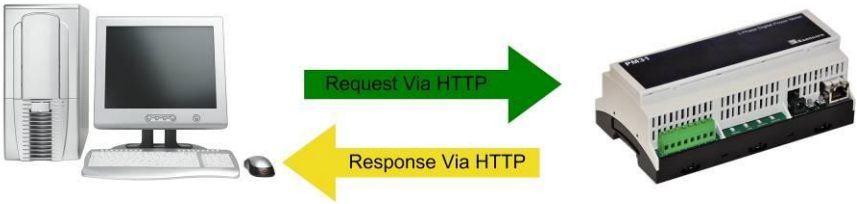

Figure 1 – PM31 HTTP: Request/Response

Figure 1 (above) shows the PM31 returning data via a HTTP: response.

Simply, the PM31's function is to send a response (by a HTTP: message containing sensor data) upon request from a web client like a browser or send data to a central web server.

The PM31 supports a user configurable *IP address.* Its IP address gives it uniqueness on the network which it is attached to. It is through the IP address, that the PM31 is able to take its place on the Internet, becoming fully accessible to queries by the user.

The PM31 consists of a base unit with one Ethernet communication port. Within the base unit are microcomputers, which handle the Internet protocol, the communication ports, sensors, and sensor signal conditioning. The PM31 has no keyboard or display because it functions as a sensor, not as a computer.

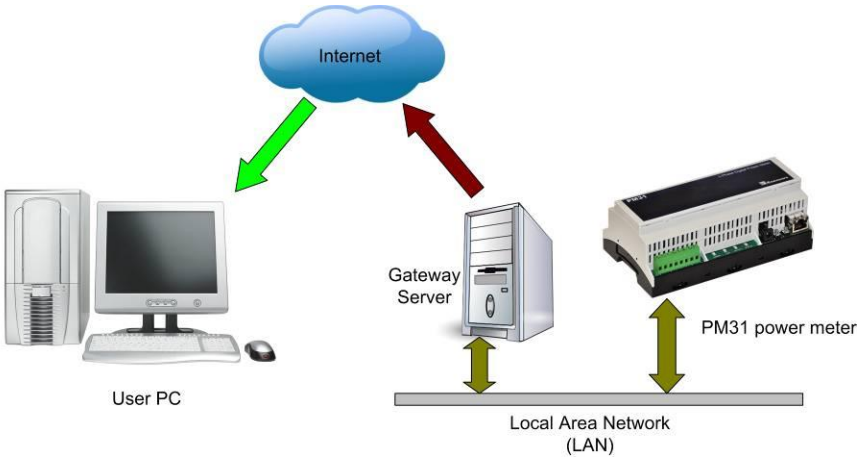

Figure 2 – How the PM31 works.

PM31 Hook-up

a. Powering up the PM31

The PM31 can be powered by a regular 120V/240V 60Hz/50Hz AC supply (on the terminal block) or through a 9V or 12V DC adapter. Either option may be used.

b. PM31 Connections.

The PM31 comes with two sets of terminal blocks as shown in the figure 3 below. There are two on the top side. The First set has connections for the current channel inputs, and the second set consists of voltage channel inputs.

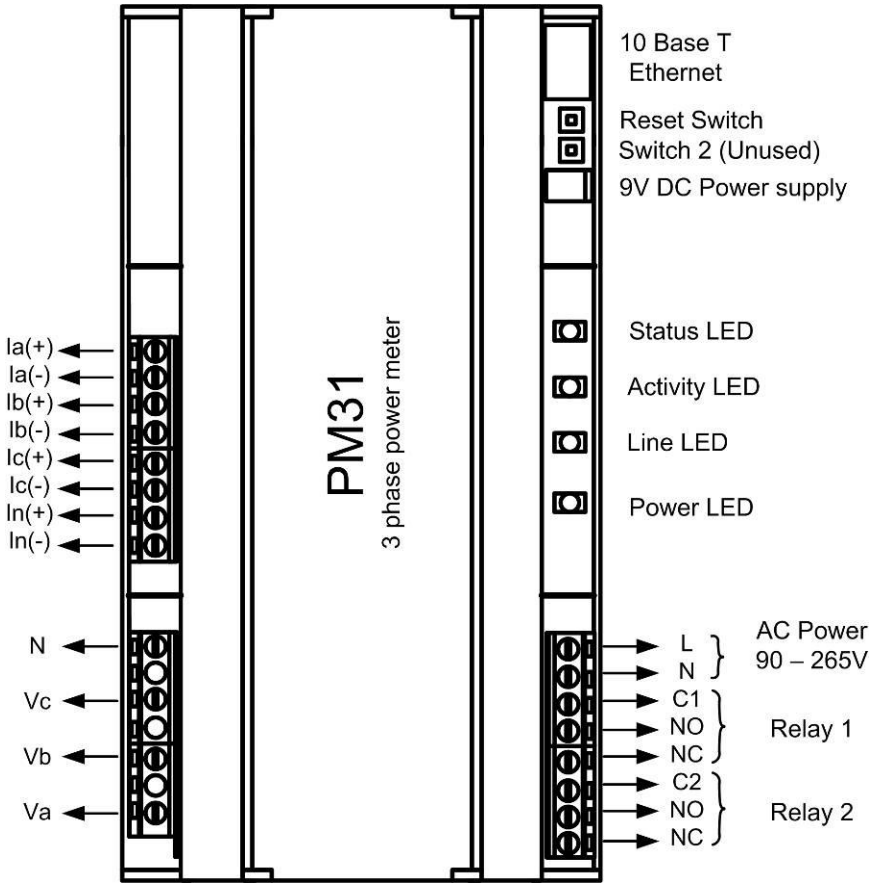

Figure 3 – PM31 Connections.

The third set on the bottom side has inputs for AC power, which can also be used to power loads controlled by two relays. For each relay, there is a Common line, C and two outputs marked as Normally Open (NO) and Normally Closed (NC).

The device has RJ45 socket for Ethernet and a DC jack for 9V DC power input as well.

c. PM31 Electrical Wiring Diagram

A three phase power meter may be connected to a power distribution system in multiple ways. The ANSI C12.10 standard lists 23 configurations (e.g. 1S). See: http://www.uomschool.org/Meter_Book/Table%20of%20Contents/Self-Contained%20Diagrams/2S%20-%20240V%20-%203W.htm. Many of the configurations differ only by voltage or by slight variations. The major configurations are shown in the table below.

The current measurement section of the meter has four pairs of inputs, a pair for each phase (A, B, C) plus an optional one for the neutral (Fig. 4). The low sides of the input leads are connected to circuit ground (Neutral) within the meter. Each input should be connected to a Current Transformer (CT) (with built in burden) which is isolated from the others. Use only CTs with voltage output (i.e, with built in burden such that voltage output does not exceed 350mV RMS). For existing current output CTs, use the voltage output CT to measure the current at the output of the current output CT. This process might require calibration. The three voltage inputs (Va, Vb, Vc) are referred to a common ground within the meter which is also the neutral N. The phase of the voltage sources are 120º apart (A:0 º, B:+120 º, C:+240º or -120º).

The meter calculates the RMS values of currents Ia, Ib, Ic, In and of voltages Va, Vb, Vc plus the true power Pa=Ia*Va*CosVIa, Pb=Ib*Vb*CosVIb, Pc=Ic*Vc*CosVIc, averaged over a cycle and 1 second. It also accumulates the energy (W-hr) as shown in table 1. The neutral current (In) is not used for power measurements.

#	wire	phase	form	Ia	Ib	Ic	In	Va	Vb	Vc	N	PT/Dir	P/L
1	3	3ϕ Delta	5S/13S	●		●		●		●	●	Dir	L
2	4	3ϕ Wye	9S/16S	●	●	●	●	●	●	●	●	Dir	L
3	4	3ϕ Wye	6S/14S	●	●	●	●	●		●	●	Dir	L
4	4	3ϕ Delta	8S/15S	●	●	●	●	●		●	●	PT	P
5	2	1ϕ Single	1S (use 9S/16S)	●				●			●	Dir	L
6	3	2ϕ Split	2S (use 5S/13S)	●		●	●	●		●	●	Dir	L

Note: For Single Phase and 3 Single Phases use 4-wire wye mode 9S/16S. For Split Phase use 3-wire delta mode 9S/16S

Table 1. Poly phase metering configurations

Configuration	Wiring	Phase A	Phase B	Phase C
3-wire delta 01	5S / 13S	VA x IA	0	VC x IC
4-wire wye 00	9S / 16S	VA x IA	VB x IB	VC x IC
4-wire wye 10	6S / 14S	VA x IA	VB x IB (VB=-VA-VC)	VC x IC
4-wire delta 11	8S / 15S	VA x IA	VB x IB (VB= -VA)	VC x IC

Table 2. Inputs to Watt-Hour Accumulation chart

In some configurations the voltages (Va, Vb, Vc) refer to line voltages (L) while for others they are the phase (P) voltages (likewise the currents). Some 3-phase configurations use 2 instead of 3 CTs in which case the power in the missing phase (here B) must be assumed as equal to the others and added to the total. Where phase voltages are used, a PT (potential transformer) must be included in each phase to provide ground isolation but line voltage inputs can be connected directly (Dir). The 3-phase meter can also be used for single phase or for split phase. Several popular configurations are shown in the following figures.

PM31 supports multiple configurations, as defined by the American ANSI C12.10 standards above. Each of these modes requires that the appropriate option be selected on the device settings page available through a web browser. This is described in ‘Energy demand updates and wiring form’ section of this user manual. See Figure 21.

1. 3 Phase 3 Wire Ungrounded Delta (ANSI Meter form: 5S/ 13S)

No Vb or Ib is connected

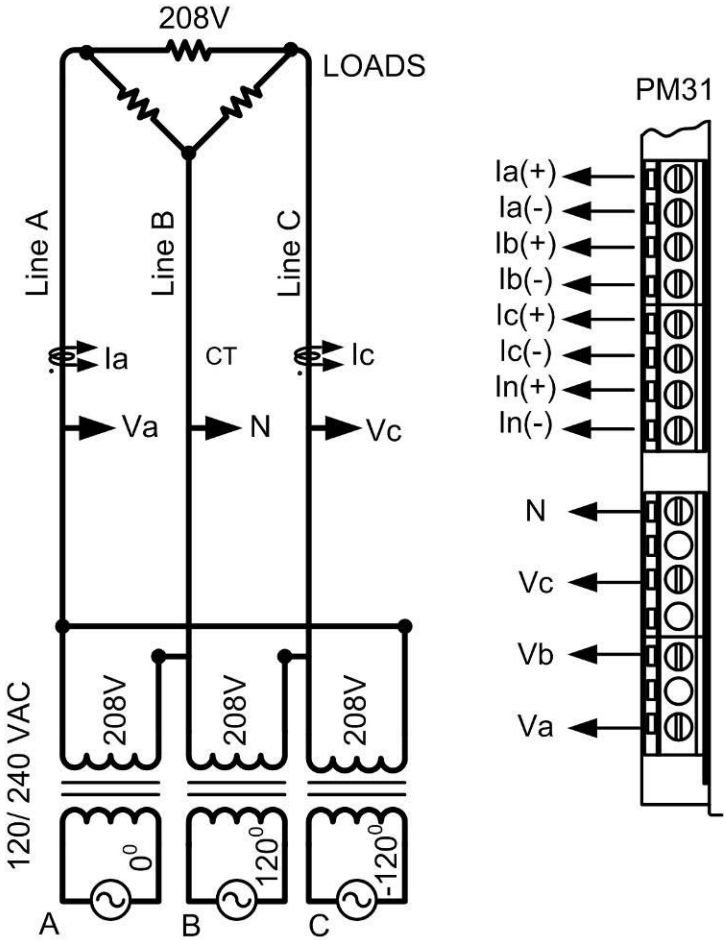

Figure 4. 3 Wire Ungrounded Delta (5S/ 13S) Wiring Diagram

2. 3 Phase 4 Wire Standard WYE
   (ANSI Meter form: 9S/ 16S)

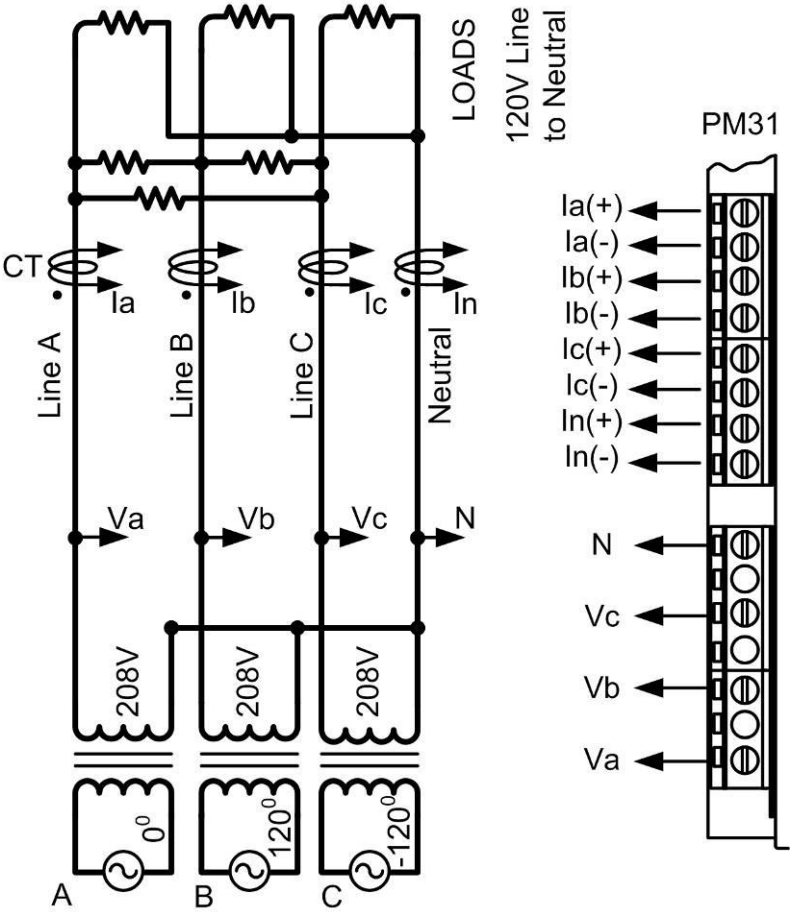

Figure 5. 4 Wire Standard Wye (9S/ 16S) Wiring Diagram.

3. 3 Phase 4 Wire Reduced WYE
   (ANSI Meter form: 6S/ 14S)

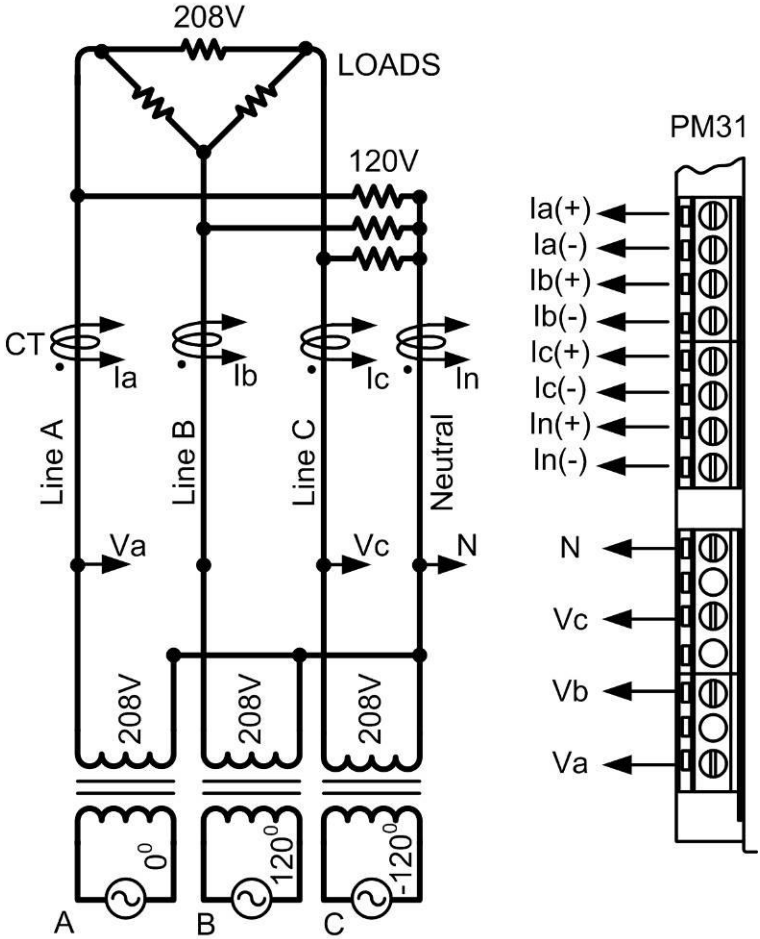

Figure 6. 4 Wire Reduced WYE (6S/ 14S) Wiring Diagram.
(Preliminary) *No Vb is connected*

4. 3 Phase 4 Wire Delta (ANSI Meter form: 8S/ 15S)

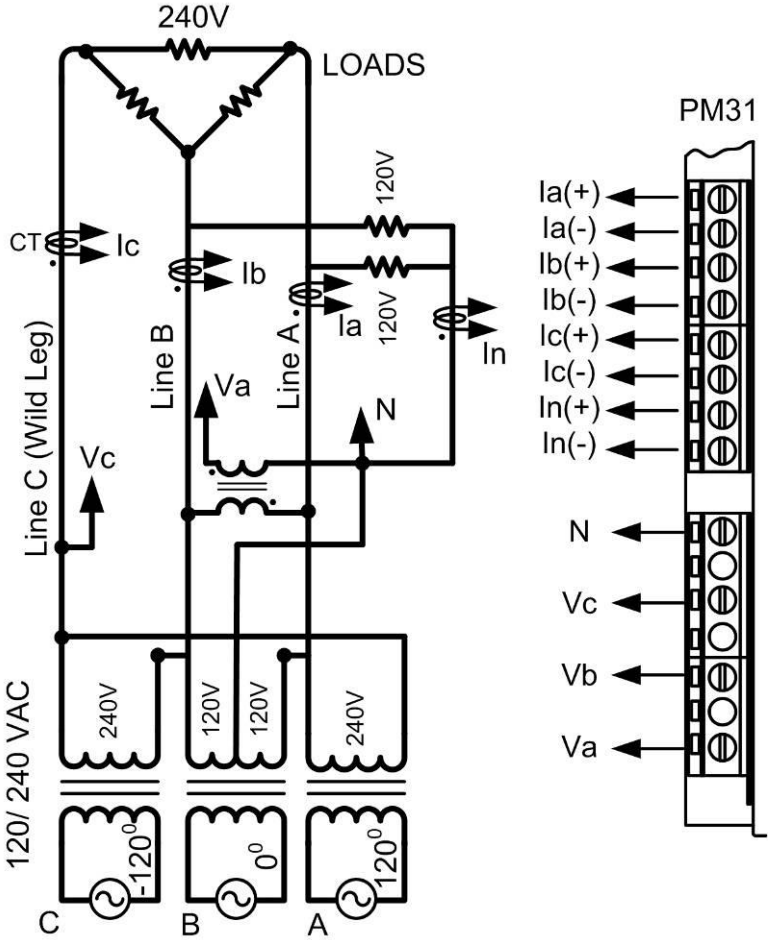

Figure 7. 4 Wire Delta (8S/ 15S) Wiring Diagram. (Preliminary)

The PM31 can also be used to monitor a single phase (Form 1S) or split phase (Form 2S). The wiring diagram for single phase measurement is shown in figure 8.

For single phase application, Meter Wiring Form in device's Settings webpage must be 4-wire wye 9S/16S and Va,Ia of PM31 must be connected.

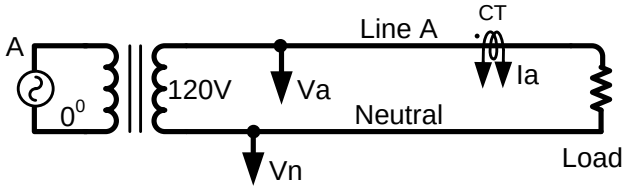

Figure 8. Single phase measurement.

The wiring diagram for split phase measurement is shown in figure 9.

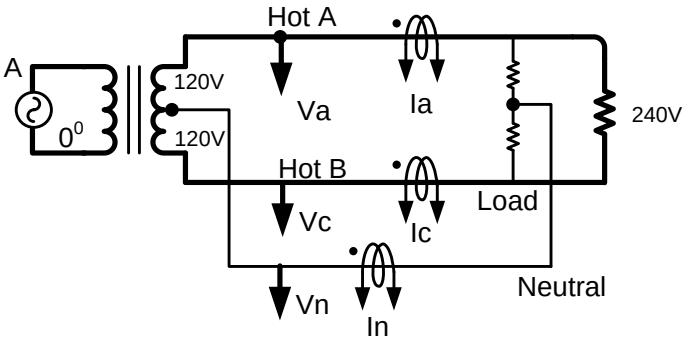

Figure 9. Split phase measurement.

Once the PM31 is wired up for Line Voltage and Current inputs, as well as the power supply, the device is ready to be configured.

Note: For Single Phase and 3 Single Phases use 4-wire wye mode 9S/16S

For Single Phases (Split Phase) use 3-wire delta mode 9S/16S

d. Configuring the PM31

To configure and use the PM31 it must be connected to a PC via an Ethernet cable as shown in either figure below. If connecting directly to a PC, a **crossover** type Ethernet patch cable must be used. It is the gray patch cable. This is shown in figure below.

A crossover type Ethernet cable is included in the *Software & Documentation Package*.

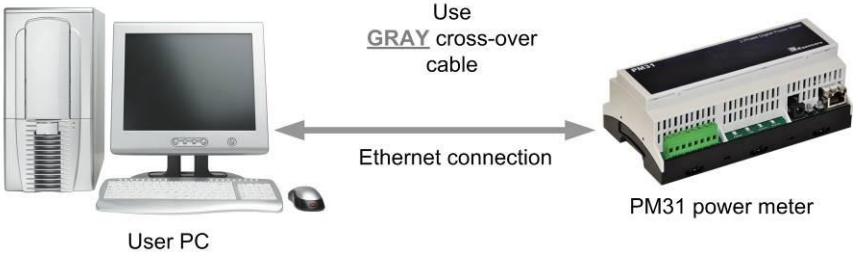

Figure 10 – PM31 connected directly to the NIC in a PC

If connecting to a PC through a HUB, a **straight** type Ethernet patch cable must be used between the HUB and the PM31. A "straight" type Ethernet patch cable is also included with the PM31. it is the BLUE patch cable. Refer Figure 11.

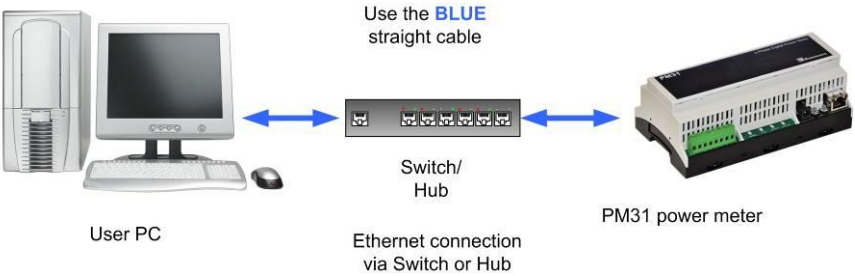

Figure 11 – PM31 connected through a HUB to the NIC in a PC

PM31 User Interface

Note: The default address for the PM31 is 192.168.254.102. This requires that the PC being used to program the Websensor has its “network interface card” (NIC) set with the same subnet address: 192.168.254.***

Once the PM31 is powered up and connected to a PC (with the NIC subnets matching), it can be queried by typing the following command into the address line of the browser.

http://192.168.254.102

Once the default IP address is entered, the browser screen should display the “PM31 Dashboard Page” as shown in Figure 13.

Device Overview Page

The “Overview” screen depicts information specific to the PM31 such as the version of the firmware, build date of the firmware, device serial number, and technical specifications. This page can be accessed through the ‘Home’ tab on the navigation bar. See Figure 12 for the Overview screen depiction.

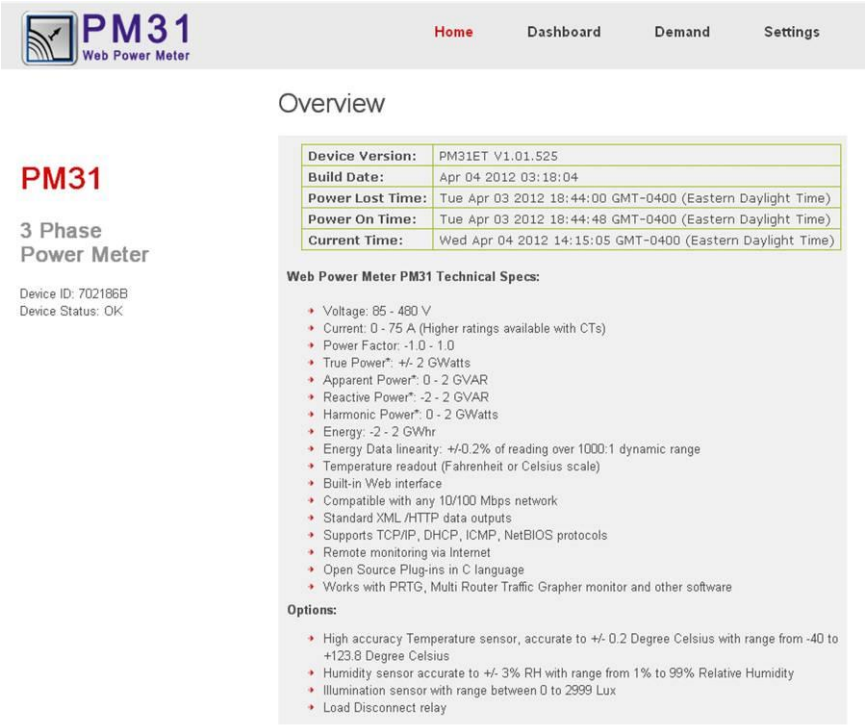

Figure 12 – The OVERVIEW Screen.

Dashboard Page

The Dashboard provides a Gauge display of the main parameters from the PM31. To view all the parameters, switch to ‘Table’ view by clicking on the button on the left side of the page. You can always switch back to the gauge display by clicking the Dashboard tab on navigation bar, or “Switch to Gauges” button on the Table page. The data is updated in real time on these pages.

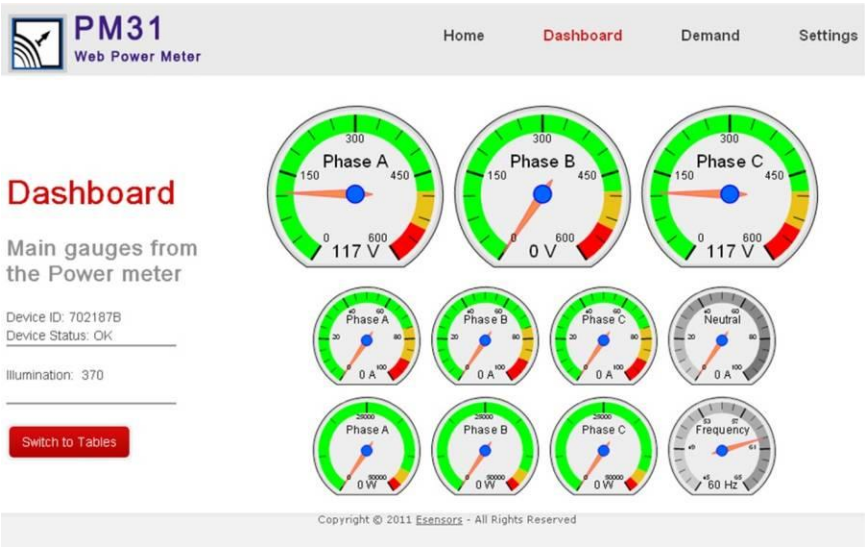

Figure 13 – PM31 Dashboard Page display

The Left colon shows, along with Device ID and status, information on any additional sensors present. The PM31 has the ability to support temperature, humidity and illumination sensors, which are available as options at the time of ordering. Depending on whether your unit is equipped with any such sensors, the display will automatically show the readings from these sensors.

Sensor Measurements

The Sensor Measurements are available on the Dashboard as well as the Table view pages on the PM31. The parameters displayed on this page includes

- Voltage, Current
- Power factor, True and apparent power,

- Fundamental active, Harmonic and Reactive power
- Energy, Period Energy*.
- Period Energy Accumulated time
- Phase Angles
- Temperature, humidity and illumination (Optional).

Phase	Voltage (V)	Current (A)	Active Power (W)	Fundamental Act. Power (W)	Apparent Power (VA)	Energy (kWhr)
PHASE A	118.91	0.77	92.3	92.3	92.3	26.91
PHASE B	119.20	0.76	91.4	91.5	91.5	26.42
PHASE C	119.18	0.77	92.7	92.6	92.7	26.91

Phase	Harmonic Power (W)	Reactive Power (VAR)	V-I Angle	Power Factor
PHASE A	0.0	0.0	0.2	0.999
PHASE B	-0.1	0.0	1.0	0.999
PHASE C	0.1	0.0	0.4	0.999

Figure 14 – Data table from the PM31

***** Period energy is identical to a trip meter. It can be used to track/ measure the energy for a specific time period. Clicking the ‘clear period energy’ button resets this value to zero.

IF your PM31 is equipped with Temperature and Humidity sensors, it is possible to alter the temperature units by clicking on the “Change Temperature Unit” button provided next to the temperature reading.

Demand Page

The Demand page provides information on Energy Demand records accumulated over specified time periods. This time period can be set in the Settings Tab. An interval of 30 minutes means that the PM31 will calculate the average power for intervals of 30 minutes each, and will be displayed as a bar graph on the Demand page.

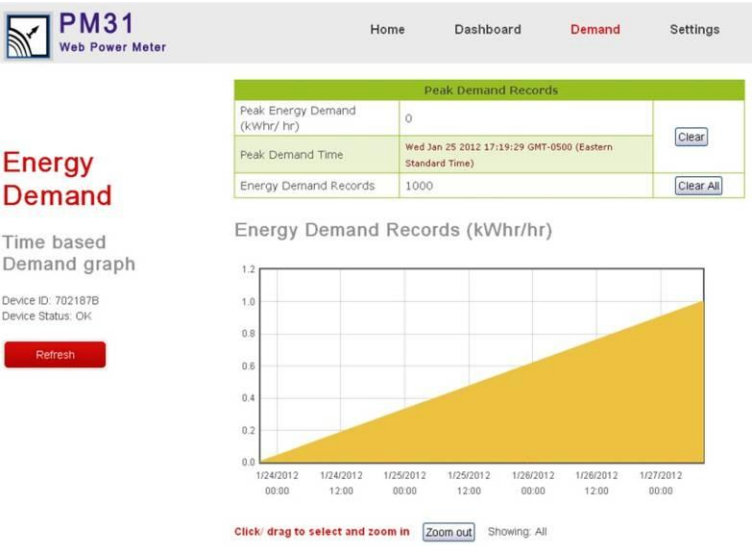

Figure 15 – Sample Energy Demand graph from the PM31

The graph comes with an interactive display. To zoom in to a specific time period, click and drag an approximate region by looking at the time scale on x axis. By hovering the mouse over each bar, the information on that bar will be displayed. Clicking the ‘zoom out’ button will bring back the original graph. To refresh the Energy demand records to see any newly available records, click the refresh page on the left side of the page.

Network Configuration

The NETWORK CONFIGURATION page enables the user to set up the device IP and host name using the web interface. This page is accessible through the ‘Network’ Button on the left side in Settings Page.

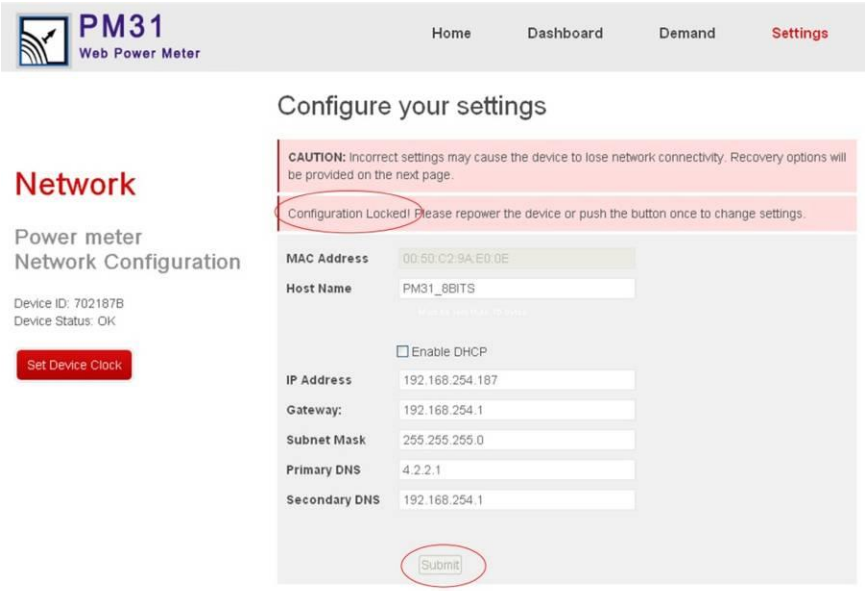

Figure 16 – Network Configuration screen (locked state).

From the NETWORK CONFIGURATION screen it is possible to change the various addresses involved in any IP addressable device. Once changes are made it is necessary to “left click” on the “Submit” button to have the changes take effect.

Note that in Figure 16, the “Submit” button is “grayed-out”. This is because the page is “locked”.

The only time data may be changed on this page is during the first five (5) minutes after a “power-up” or by pressing the rest button (See Figure 3 for reset button location). In this way the page is protected from being changed inadvertently (or maliciously).

See Figure 17 which shows a “timer window” displaying the time available to change the settings before the CONFIGURATION PAGE gets locked.

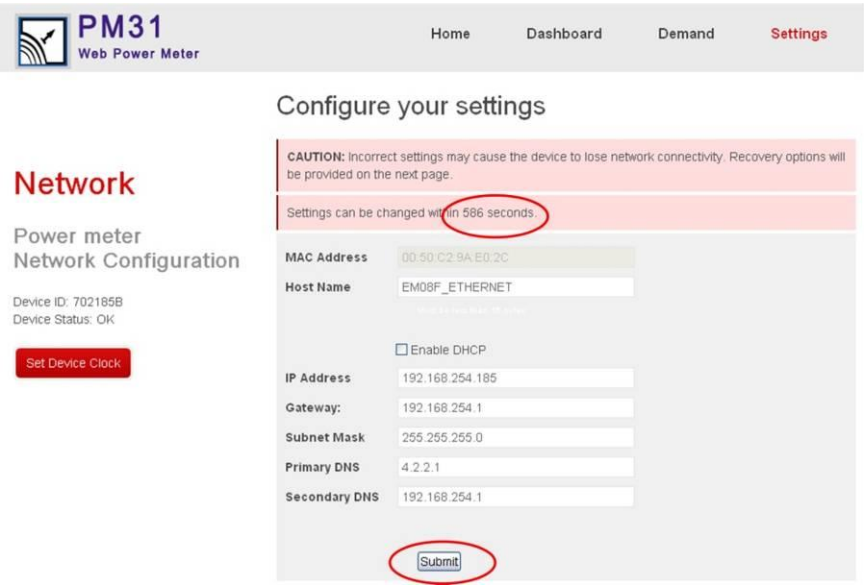

Figure 17 – Network Configuration screen (timer activated)

When you change the IP address though the webpage interface, the next page displayed is the “Reboot in Progress” page depicted in Figure 18

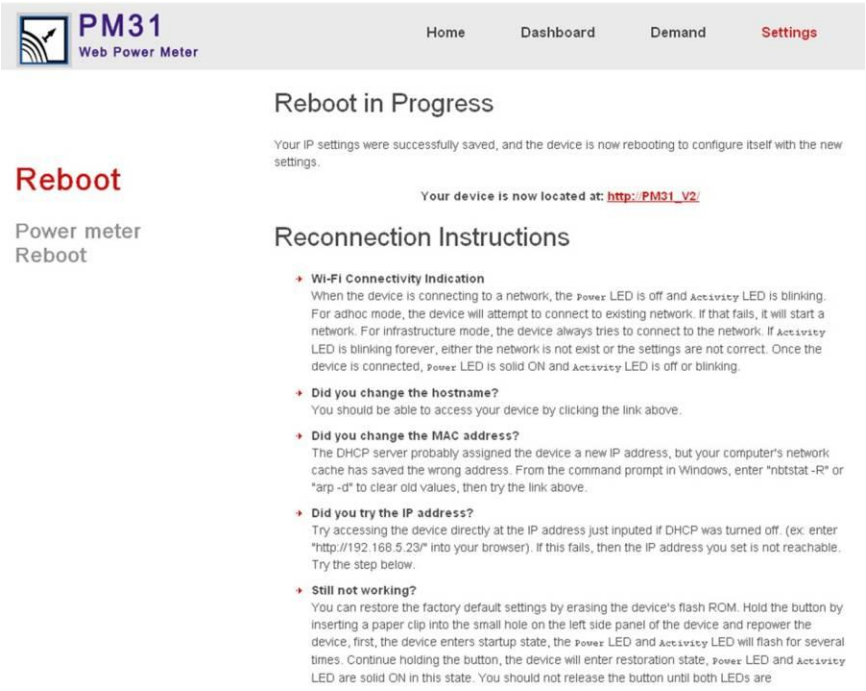

Figure 18 – “Reboot in Progress” screen

Alternative Method to Change the PM31 IP Address

Alternately, there is a “keyboard short-cut” way of changing the IP address by using following command:

http://192.168.254.102/index.htm?eipaaabbbcccddd

where: *aaa.bbb.ccc.ddd* is the new IP address of the PM31.

You can confirm the change by typing the new IP address on the address bar. Or, ping the new address from a command

prompt screen.

Refer to the Quick Reference section for more administrative “keyboard short-cut” commands.

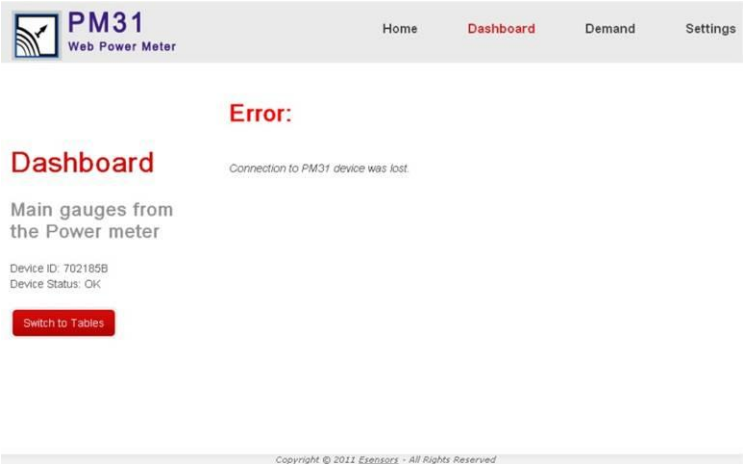

Figure 19 – Error Message – CONNECTION LOST.

The reason for the “Error: Connection to PM31 device was lost” message is because the browser still points to the former IP address. When the new IP address is entered into the address bar the screen will correctly display the PM31 Dashboard Page correctly.

Setting the device clock

The PM31 comes with a built in real time clock. The timer will be used to keep track of the time for which the period energy was accumulated. Period energy is explained later in this manual.
To set the device clock, simply click the “Set device clock” button on the Network Configuration page. The device will automatically

update its time registry with your PC's system time. The device is designed to synchronize its clock when Internet connection is available. So there is no need to set device clock as long as the PM31 is connected to the internet. The timer power is backed-up by a battery to hold the data even when power is lost or disconnected. If the device is locked, you may need to unlock it before being able to set the Device Time.

Energy Demand updates and Wiring form

The PM31 settings page can be used to select the Desired wiring form as well as Energy demand update interval. Simply select the values from the drop down list and click update. The settings will be saved on to the device memory.

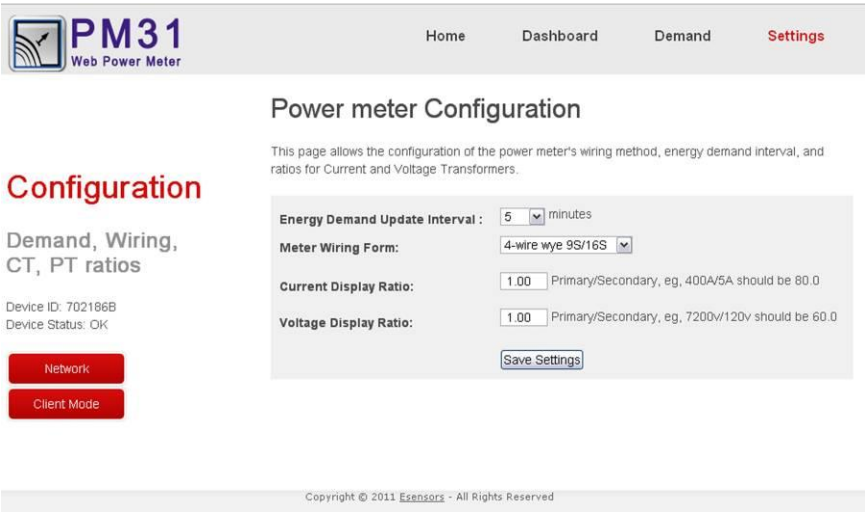

Figure 20 – Energy Demand update and wiring form selection.

Current and Voltage Display ratios

The Settings page also provides options to select Current and Current display ratios. This feature can be used when PTs and CTs with values other than default ratings are used.

Push Data to Remote Server.

The PM31 is able to handle both client and server modes for data transfer. In server mode, the device can be accessed through a browser or a custom application via http commands. Alternatively, It can be programmed to push data to up to two remote servers at programmable intervals. These settings are available on the Remote server configuration page. Simply click “Client Mode” on the settings page to access and configure this feature, and follow the instructions on the page. See *Appendix C* for details.

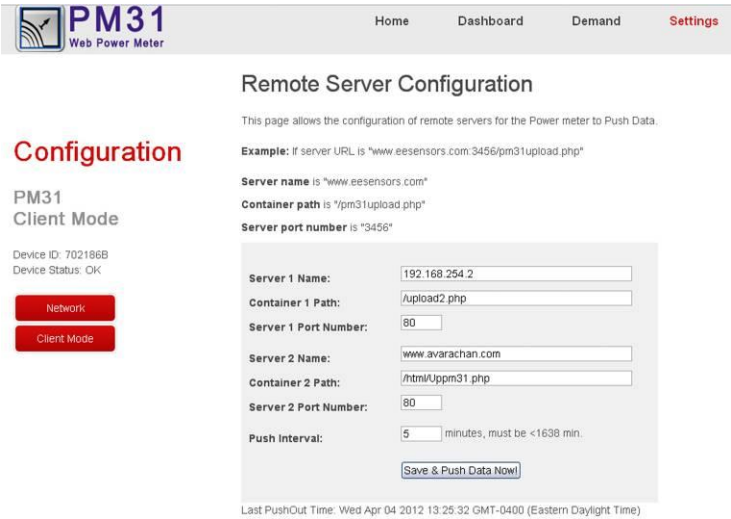

Figure 21 – Remote Server configuration.

Custom applications using simple Http Request

The PM31 can output a data string when it receives http request. This feature can be used to develop custom applications to tap into the various features offered by the device. See appendix B for details.

Basic Troubleshooting Instructions

1. **Did you change the IP address?**
   The DHCP server probably assigned the device a new IP address, but your computer's network cache has saved the wrong address. From the command prompt in Windows, enter "nbtstat -R" or "arp -d" to clear old values and try again. Make sure to launch the command prompt as administrator.

2. **Did you try the IP address?**
   Try accessing the device directly at the IP address just inputted if DHCP was turned off. (Example: enter "http://192.168.5.23/" into your browser). If this fails, then the IP address you set is not reachable. Accessing the device via IP address is more reliable than using host name since some networks may have trouble dealing with host name. If you forgot the IP address and the host name of PM31 device, try Step 3 below.

3. **Use Ethernet Discoverer to hunt PM31 devices**
   Microchip's Ethernet Discoverer is a very nice tool to list all PM31 devices on the same subnet. Double click *Microchip Ethernet Discoverer.exe*, Click "Discover Devices" button, the IP address, Host name and MAC address of all PM31 devices will be listed. The default host name is

PM31_ETHERNET. This is what will be displayed until you change the host name. It is also helpful to check PM31's IP address when it is automatically assigned by DHCP server. *Microchip Ethernet Discoverer.exe* does not need to be installed; it can be copied to and executed from any location. (This utility program can be found on the supplied CD in the "Manual" Folder within the "PM31" Folder).

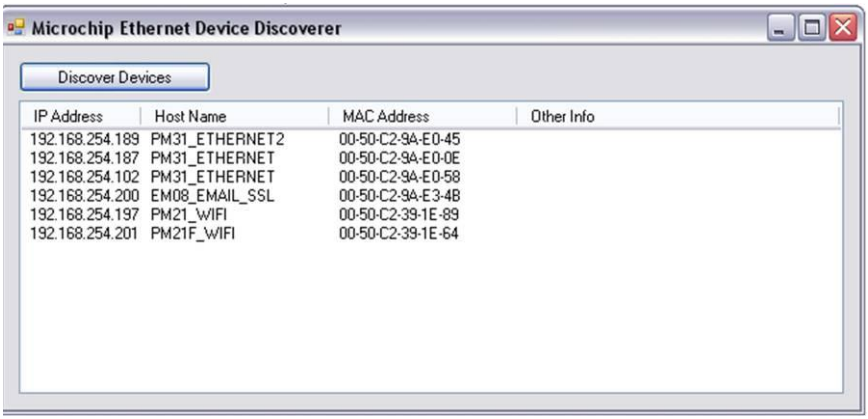

Figure 22 – Microchip Ethernet Device Discover screen

4. **Still not working? Device Reset**
   You can restore the factory default settings by erasing the device's flash ROM.

Resetting the PM31

- Hold the button by inserting a paper clip into the small hole on the left side panel of the device and then re-power the device.
- The device enters boot loading state which will last for four seconds, both Power LED and Activity LED are

extinguished in this state, then they will flash for three times and enter startup state.

- Continue holding the button, the device will enter restoration state, In this state you will notice the Power LED and Activity LED remain ON.
- You should not release the button until both LEDs are extinguished, which means restoration is done.
- The whole procedure takes about eight to ten seconds. The factory default IP address is “192.168.254.102”.

Factory Default settings.

PM31 Settings

Energy Demand Update interval	: 5 minutes
Meter Wiring Form	: 4-wire Wye (9S/ 16S)
Current Display Ratio	: 1
Voltage Display Ratio	: 1

Network Settings:

IP Address	: 192.168.254.102
Gateway	: 192.168.254.1
Subnet Mask	: 255.255.255.0
Primary DNS	: 192.168.254.1
Secondary DNS	: 192.168.254.1

Remote Server Settings:

Server 1	: Null (Empty)
Server 2	: Null (Empty)
Port	: 80

Appendix A

PM31 Keyboard Short-cuts:

Note: Features such as temperature sensor readings are available only If your device supports it.

Display Temp/ humidity sensor measurements, using PM31_ETHERNET as the host name:

http://PM31_ETHERNET/index.htm/?em

Change Temp unit to C:

http://192.168.254.102/index.htm?etpC

Change Temp unit to F:

http://192.168.254.102/index.htm?etpF

Change Temp unit from C to F or F to C:

http://192.168.254.102/index.htm?etpX

Change IP to aaa.bbb.ccc.ddd:

http://192.168.254.102/index.htm?eipaaabbbcccddd

(NOTE: no "octet-points" are required

Clear Period Energy:

http://192.168.254.102/index.htm?ecEP

Appendix B:

The PM31 can output a data string when it receives http request. The string can be obtained by typing the device IP followed by specific commands in the address bar of your browser.

For Power Parameters in xml format,use

http://192.168.254.102/status.xml

sample:

```
<response>
    <sid0>702185B</sid0> // Device ID
    <stu0>OK</stu0>    // Device Status
    <tm0>0</tm0>    // Temperature if supported
    <hu0>0</hu0>    // Humidity if supported
    <il0>0</il0>    // Illumination if supported
    <pot0>0</pot0>
    <pm300>114.74</pm300> // See table on page 36 for details
    <pm301>0.07</pm301>
    <pm302>276.7</pm302>
    <pm303>0.116</pm303>
    …
    <pm339>0.000</pm339>
    <pm340>1304372151</pm340> // UNIX time stamp
    <tun0>F</tun0> // Temparature unit (C/ F)
    <led0>1</led0>
    <led1>1</led1>
    <btn0>up</btn0>
    <dvc>2</dvc> // Device Control Byte
    <esc>64</esc>// Device Config Flag
</response>
```

Appendix B

For Energy Demand data in xml format, use

http://192.168.254.102/EnergyDM.xml

sample:


```
<response>
    <energyDM>
    <edNum>400</edNum> // Number of records
    <TMF>UTC</TMF> // Time format
    <pm339>1.271</pm339>    // Max Energy Demand
    <pm340>1325033716</pm340> // Max Demand Time
    <ed0000>0.275</ed0000>
    <!-- Most recent Energy Demand record -->
    <et0000>1326140721</et0000>
    <!—Time stamp for most recent Energy Demand record -->
    <ed0001>0.276</ed0001>
    <et0001>1326140421</et0001>
        ..
    <ed0399>0.280</ed0399>    // Oldest Demand record
    <et0399>1326020880</et0399>
    </energyDM>
</response>
```

Status.xml

Phase	Voltage	Current	Active Power	Apparent Power	Fundamental Active power	Power factor	Reactive Power	Harmonic Power
Phase A	pm300	pm301	pm304	pm305	pm308	pm303	pm307	pm306
Phase B	pm309	pm310	pm313	pm314	pm317	pm312	pm316	pm315
Phase C	pm318	pm319	pm322	pm323	pm326	pm321	pm325	pm324

XML parameters continued		
Phase	V-I Angle	Energy
Phase A	pm302	pm333
Phase B	pm311	pm334
Phase C	pm320	pm335

Device Parameters	
Neutral Current	pm327
Frequency	pm328
Total Active Power	pm332
Total Energy	pm336

Device Parameters	
Angle (Va-Vb) Deg	pm331
Angle (Vb-Vc) Deg	pm330
Angle (Va-Vc) Deg	pm329

Table 3. XML parameter listings

Appendix C:

PM31 can push measurements to up to two servers at configurable interval. The length of server name and container path should be less than 70 bytes, the total length of URL should be less than 140 bytes. The server URL and report interval are configurable, which means they can be changed by customers. If only one server is required, leave the second server name blank. PM31 will not push data if the server field is left blank or if the server name cannot be resolved by DNS service. One also can set push interval to zero to disable pushing data out. PM31 will be time out in 30 seconds in case of connection getting lost.

PM31 uses POST method to send out the measurements, the payload of the POST message is a xml file (string). Once xml file is received, the application can parse all measurements. The definition of xml tags can be found in Appendix B of this manual.

The tag of device serial number is "<sid0>", every device has a unique serial number, one can use it to identify the message is from which device.

A sample POST message sent by PM31 device is:

```
POST /html/Uppm31.php HTTP/1.0
Host: www.eesensors.com
Sensor-ID: 123456
Content-Type: application/x-www-form-urlencoded
Content-Length: xxxxxx
Connection: close
sensor_payload=<response>
    <sid0>123456</sid0>
    <dvc> device control byte </dvc>
    <esc> device config flag byte </esc>
    <tm0>temp value</tm0>
    <hu0>humidity value</hu0>
    <il0>illum value </il0>
    ...
    <pm300> value </pm300>
    ...
    <pm340> value </pm340>
</response>
```

"sensor_payload" is the variable in the POST message which carries the measurements in xml file (string) format. All measurements provided by PM31 are available in this string. The device serial number is put into both http header, "Sensor-ID: 123456", and xml file, "<sid0>123456</sid0>". When the application wants to do a quick check without looking into

the POST message body, it can check with "Sensor-ID" to identify the device.

The device control byte, xml tag for which is <dvc>, indicates optional light sensor and temperature/humidity sensor on/off status. The illumination measurement, with xml tag <il0>, should be ignored if the light sensor is off, similarly, the temperature and humidity measurement should be ignored if the sensor is off.

device control byte:

Bit 7	Bit 6	Bit 5	Bit 4	Bit 3	Bit 2	Bit 1	Bit 0
Reserved						Light Sensor ON/ OFF	T/H Sensor ON/ OFF

For all sensor on/off bits, "1" means on, "0" means off.

The Device config flag, xml tag for which is <esc>, indicates the on/off status for relays 1 and 2.

Bit 7	Bit 6	Bit 5	Bit 4	Bit 3	Bit 2	Bit 1	Bit 0
Reserved				Relay 2 ON/ OFF	Relay 1 ON/ OFF	0	0

For all relay on/off bits, "1" means on, "0" means off.

Esensors, Inc.

4240 Ridge Lea Road
Amherst, NY 14226
Phone: 716-837-8719
www.eEsensors.com